Z101 Rosshaar-Krempelmaschine / Horsehair Carding Machine

LEVEL

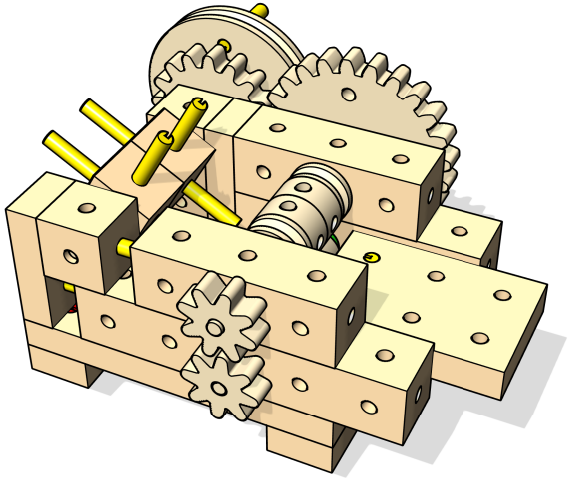

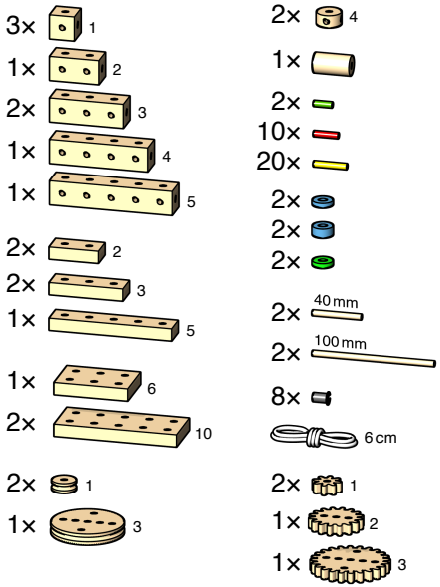

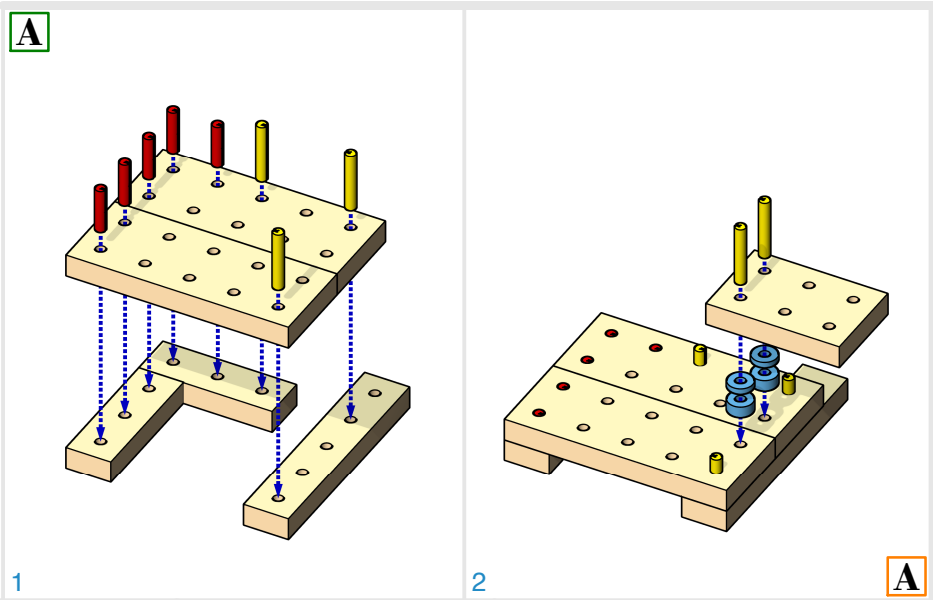

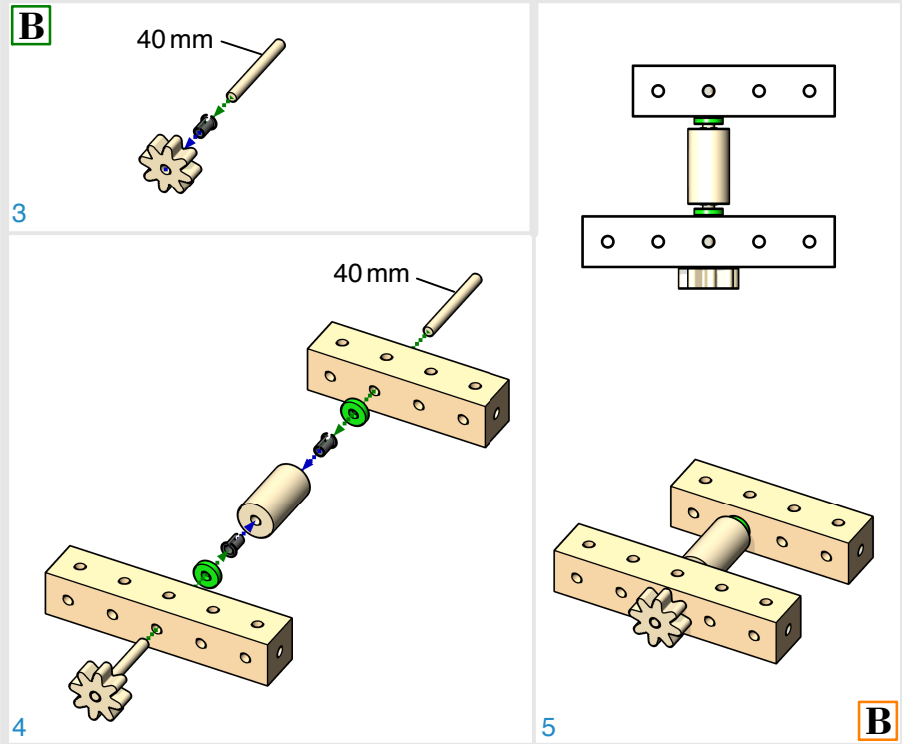

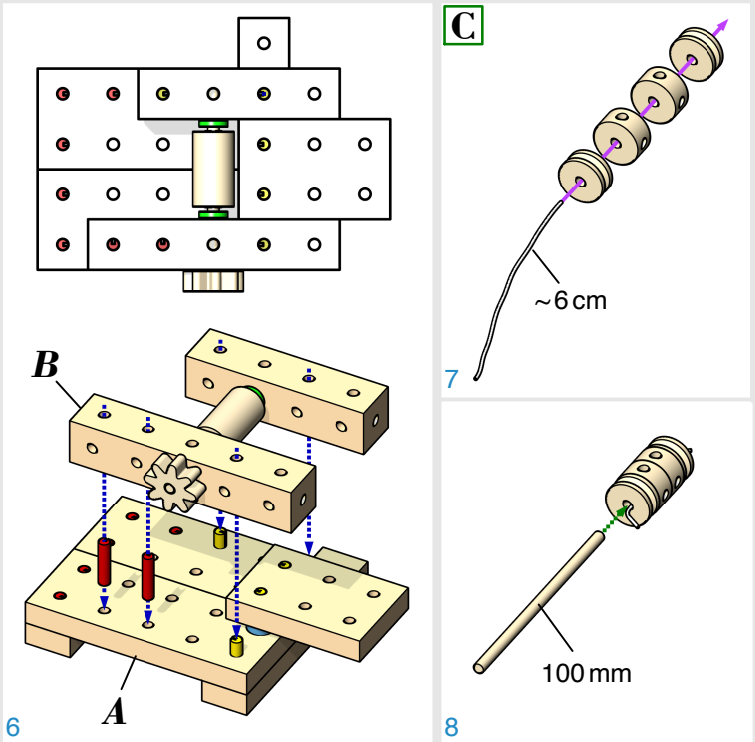

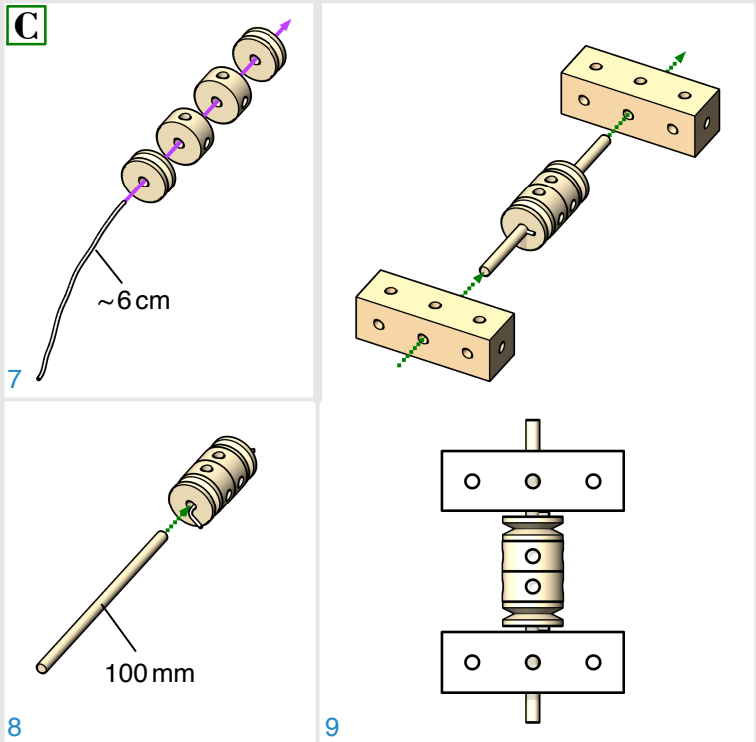

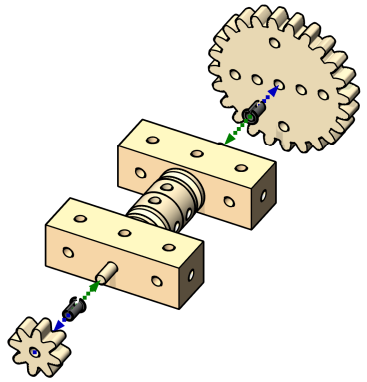

10

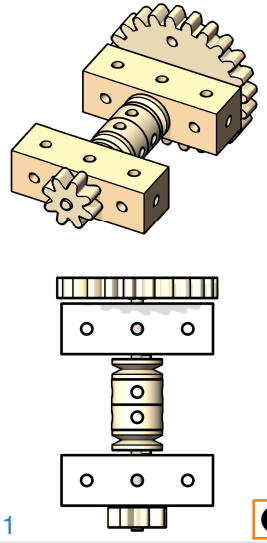

11 C

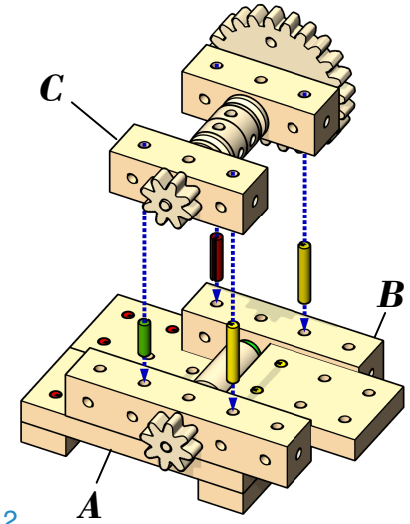

12

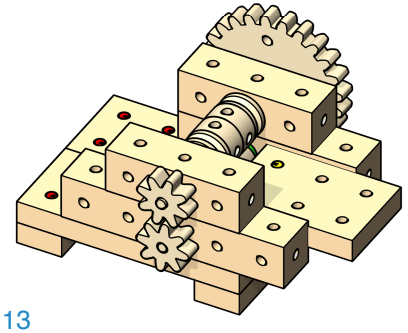

13

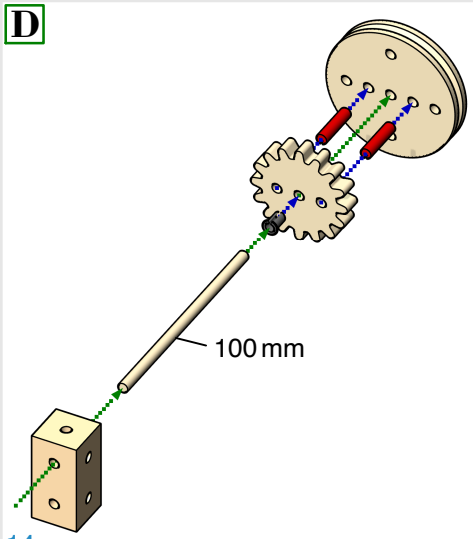

14

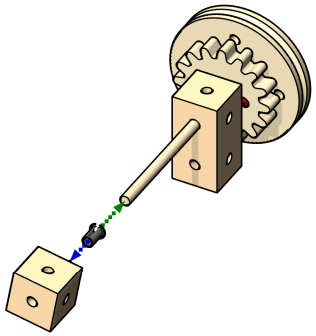

15

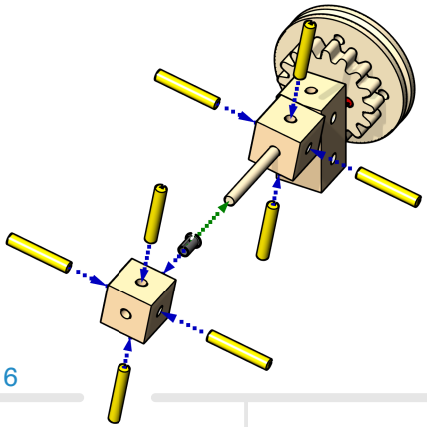

16

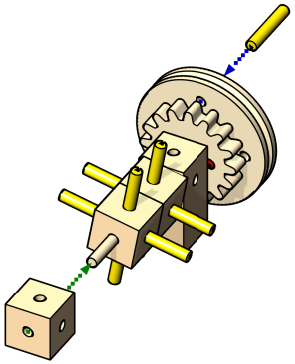

17

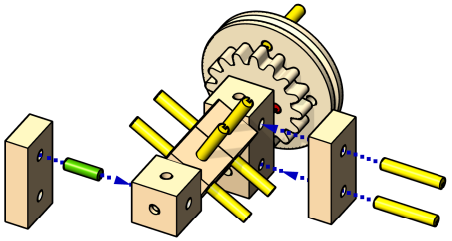

18

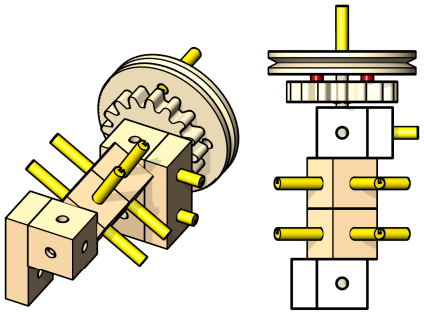

19 D

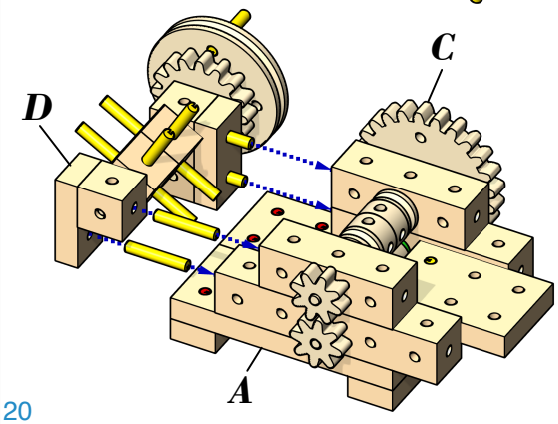

20

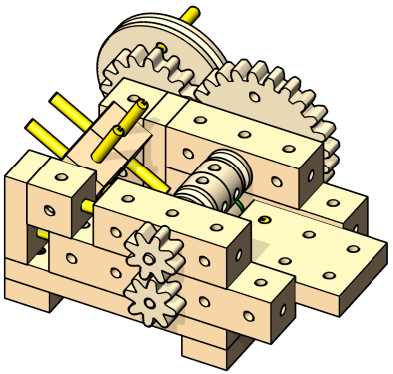
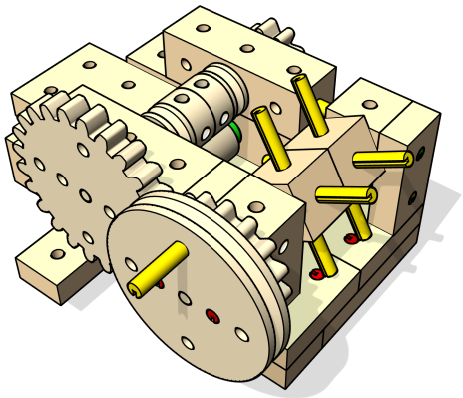
21