214 Sprungturm / Diving Platform

LEVEL

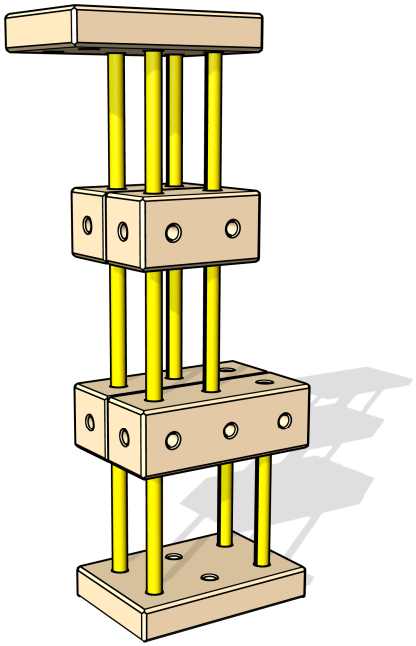

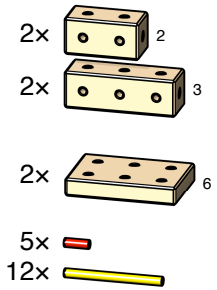

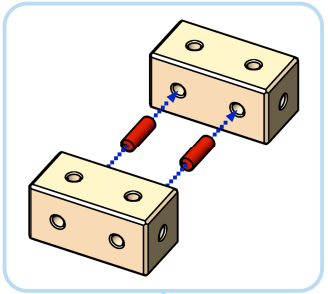

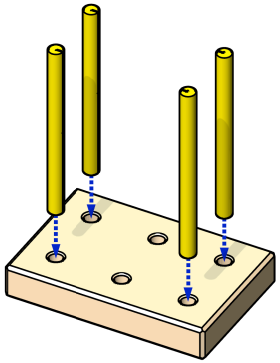

1

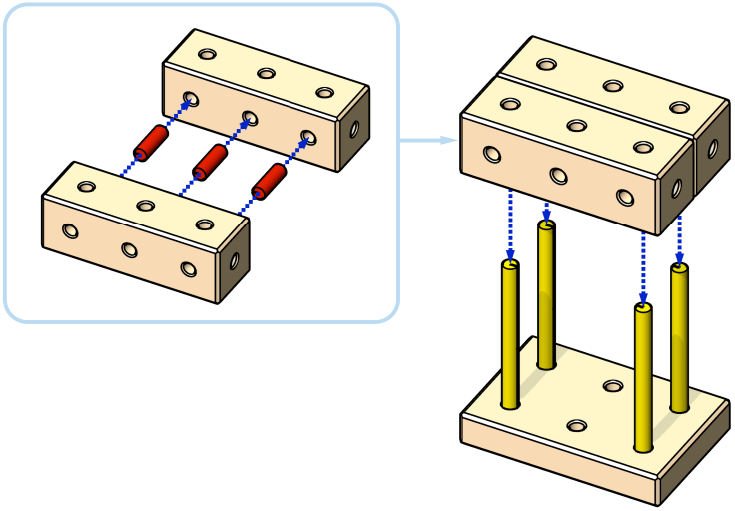

2

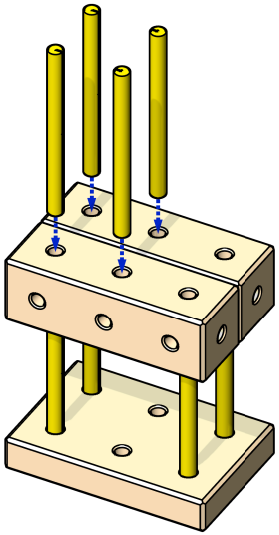

3

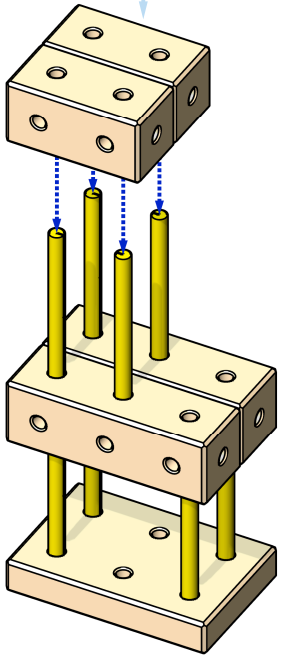

4

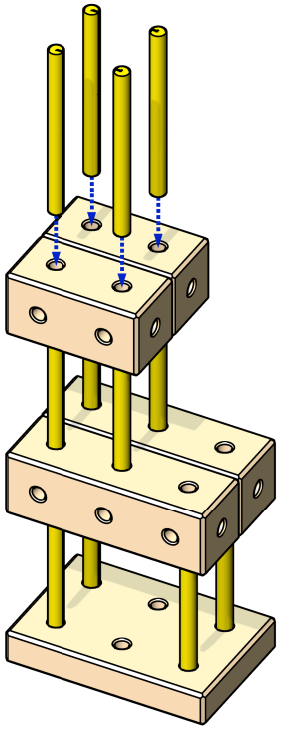

5

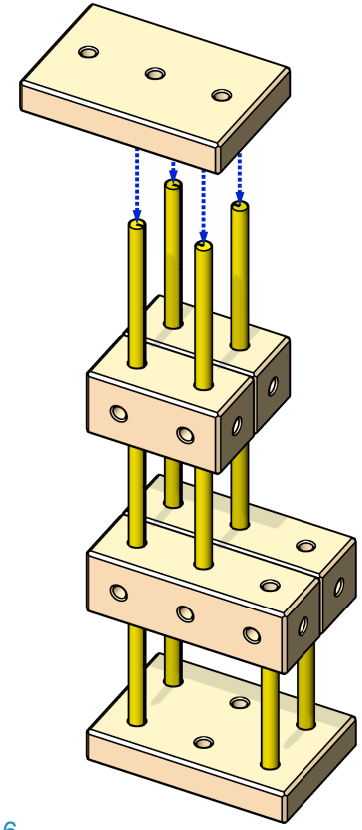

6

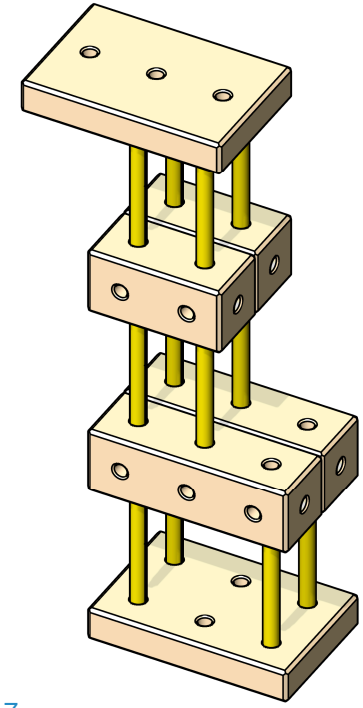

7